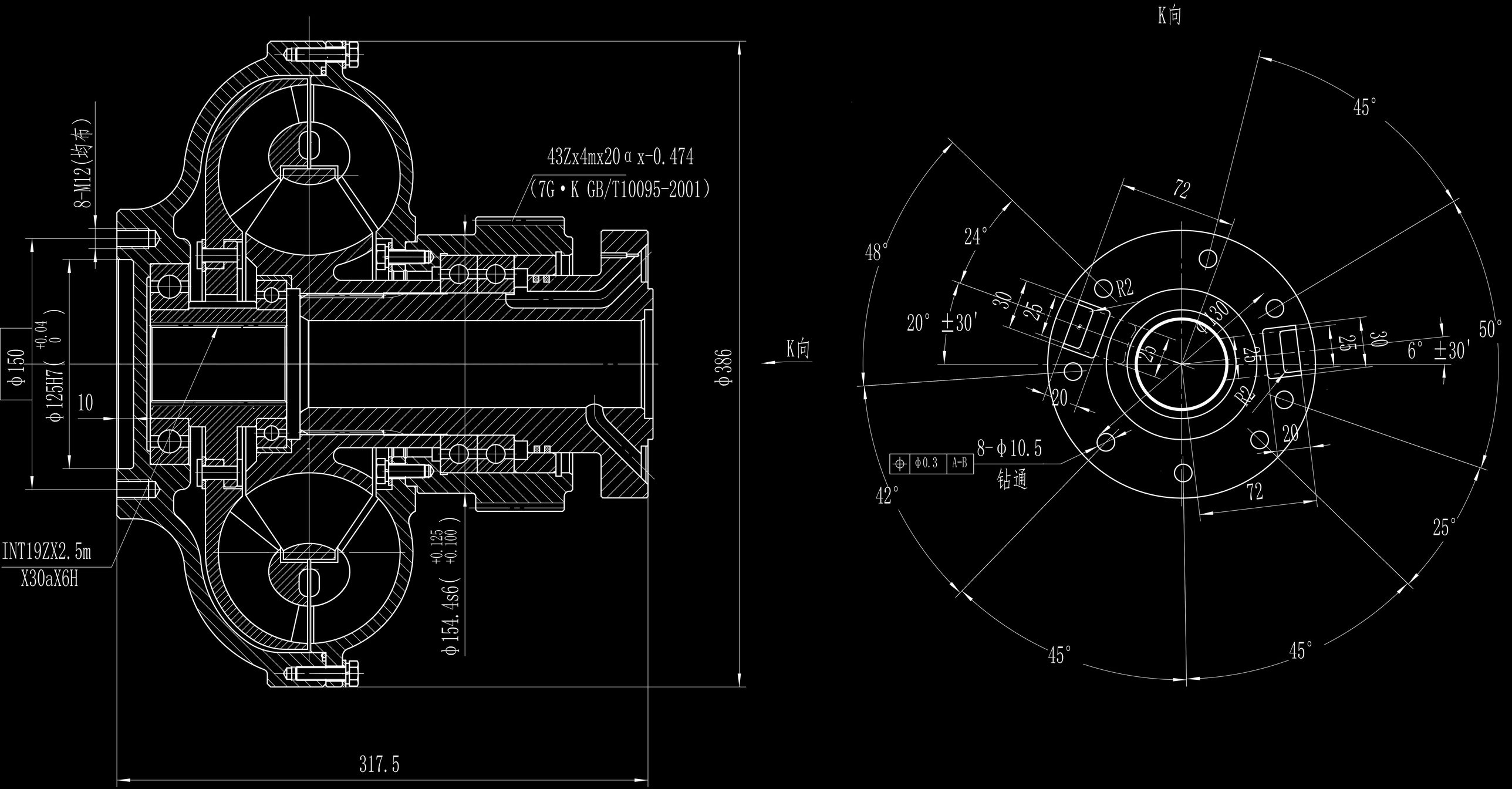
8-M12(均布)
43Zx4mx20αx-0.474
(7G•K GB/T10095-2001)
φ150
φ125H7(+0.04 0)
10
φ386
K向
INT19ZX2.5m
X30aX6H
φ154.4s6(+0.125 +0.100)
317.5
K向
45°
72
48°
24°
R2
30
25
20°±30'
φ30
φ25
φ26
6°±30'
50°
20
R2
20
φ0.3 A-B
8-φ10.5
钻通
42°
72
25°
45°
45°